RGB 2503

Squama

Geometric future's Squama series fan with high-performance and low noise.
Innovative design, we are different!

SPECIFICATIONS

Package	Single Pack	Triple Package
Type	Squama 2503B	Squama 2503B
Fan Dimensions (L*w*h)mm	120 x 120 x 25mm	120 x 120 x 25mm
Color	BLACK	BLACK
Materials	PBT\PC\TPE	PBT\PC\TPE
Speed Mode	2000RPM(max)	2000RPM(max)
Airflow（Cfm）	69.11CFM	69.11CFM
Air Pressure（Mmh2o）	2.92 mmH_2O	2.92 mmH_2O
Noise Level（Dba）	29dBA（max）	29dBA（max）
Motor Rated Voltage（V）	12V	12V
Motor Rated Current(A)	0.16A	0.16A
Argb Rated Voltage（V）	5V	5V
Argb Rated Current(A)	0.53A	0.53A
Argb Rated Power(A)	2.65W	2.65W
Led Interface	3-PIN	3-PIN

Power Interface	4-PIN	4-PIN
Packing Includes	Squama 2503B Fan x 1 Screws x 4 PWM extension cord x 1 ARGB extension cord x 1	Squama 2503B Fan x 3 Addressable RGB controller x 1 Screws x 12 PWM extension cord x 3 ARGB extension cord x 3
Warranty	Two-year Limited Warranty	Two-year Limited Warranty

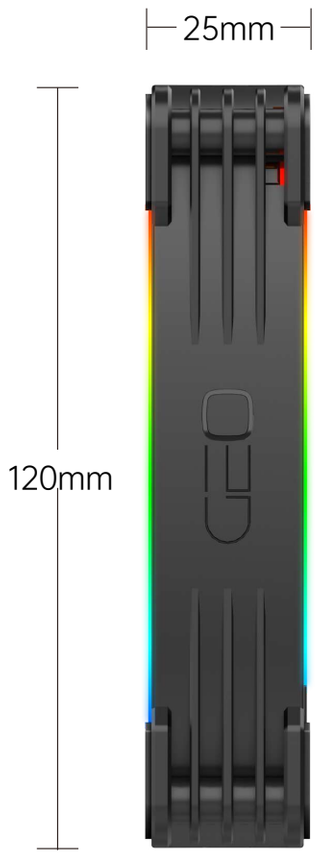

PARTS KIT INCLUDES

Single Pack

- Squama 2503B Fan x 1
- Screws x 4
- PWM extension cable x1
- ARGB extension cable x1

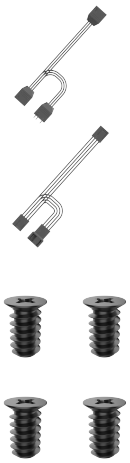

Triple Pack

- Squama 2503B Fan x 3
- Addressable RGB controller x 1
- Screws x 12
- PWM extension cable x3
- ARGB extension cable x3

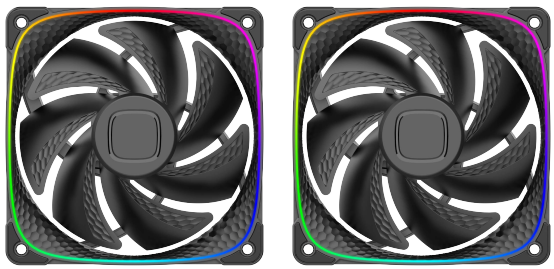

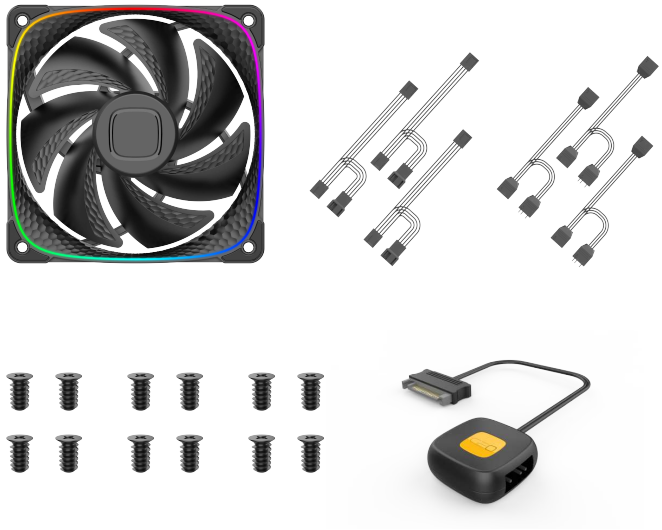

Fans/ARGB Cable Connecting to the motherboard

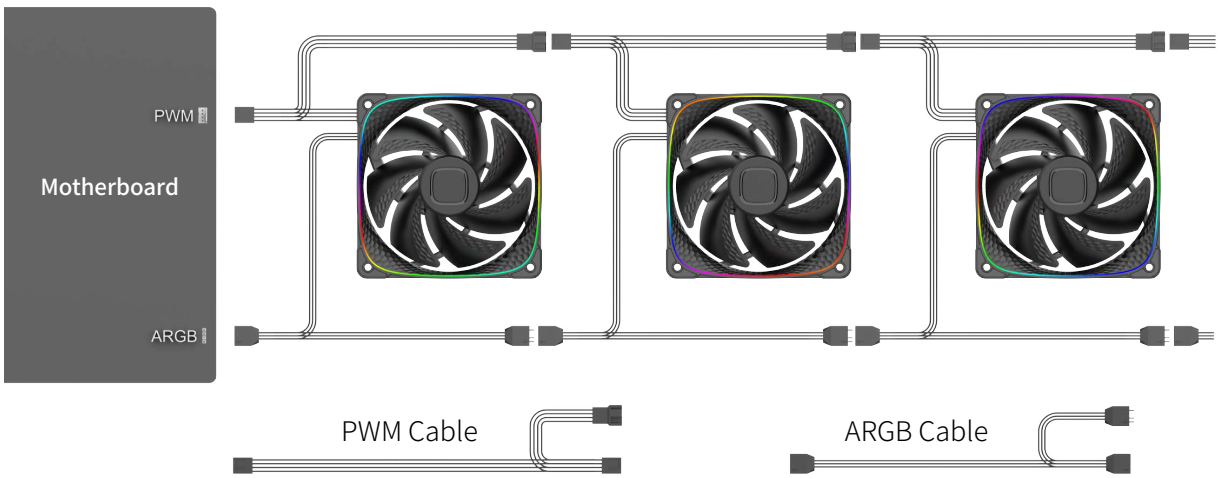

ARGB One-Click Controller Installation

If your motherboard does not support ARGB effect,you could use the included ARGB One-Click Controller to connect to your PSU' s SATA cable and the Addressable Cable in order to use the different of lighting effects.

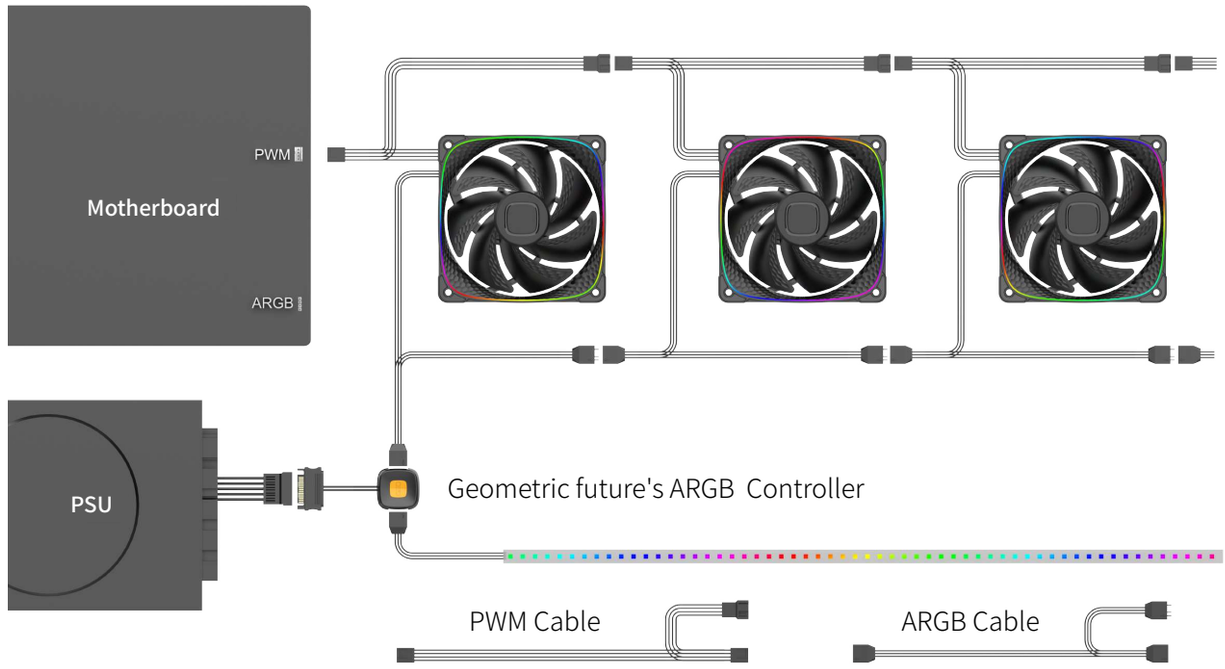

Tap the button to change the lighting modes which is as shown in the below.(Hold the button to turn on or off the lights.)

1	GEOMETRIC FUTURE yellow and orange is recommended		
2	Single color gradient	5	Lighting Form:Red, green, blue, yellow, purple, white
3	Colorful gradient	6	Breathing:Red, green, blue, yellow, purple, white
4	Colorful flow	7	Flow: Red, green, blue, yellow, purple, white

PRECAUTIONS

GEOMETRIC FUTURE
SQUAMA 2503

1. Install in accordance with the user manual' s instructions.

2. Please wear electrostatic discharge (ESD) rings and protective gloves when installing the PC.The products or components to be operated by power supply must be connected in the correct way and line sequence. Otherwise, hardware such as the computer motherboard may be burned down and personal injury may occur.

3. Do not use this product for any purpose other than the specified ones, and do not modify this product to avoid failure and damage to the product and related components.

4. To move the product and its contents, please remove all components of the product before operation to avoid damage to the product and related components,even more personal injury.

5. If you encounter any questions about product assembly or use, please consult the official customer service in time to obtain correct guidance before operation.

6. If the product and components are damaged due to unauthorized assembly,you will pay for the repair and the replacement for the components.

7. Do not insert foreign materials into the fan blade, so as not to damage the normal operation of the product.

8. Do not modify the original fan/pump cable and port in order to avoid short circuit which may burn down the products.

9. Do not touch the impeller while the fan is running to avoid injury or damage to the product.

10. Please only use this product in a computer case and keep this product away from any liquids.